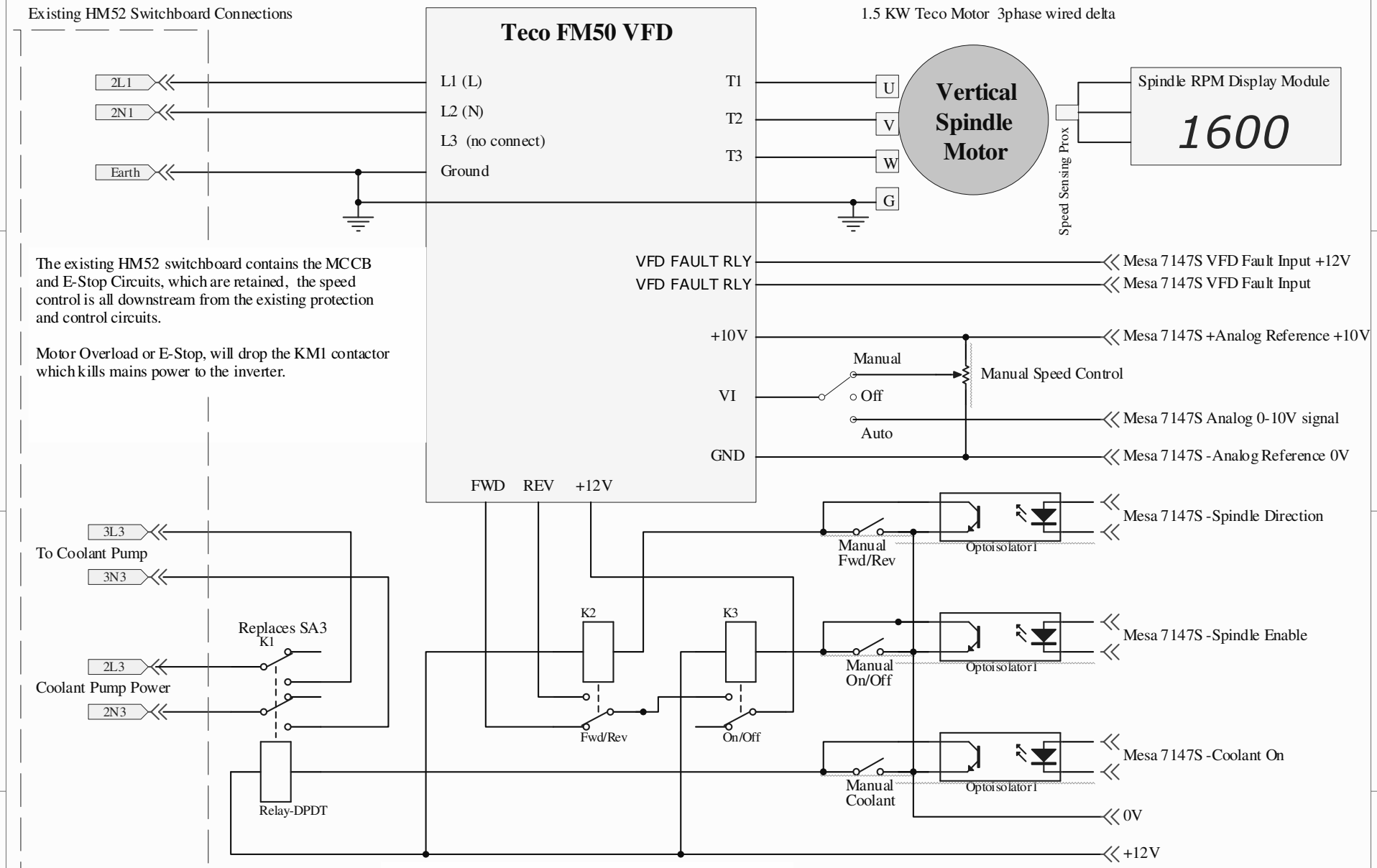

The existing HM52 switchboard contains the MCCB and E-Stop Circuits, which are retained, the speed control is all downstream from the existing protection and control circuits.

Motor Overload or E-Stop, will drop the KM1 contactor which kills mains power to the inverter.

The KM1 contactor is normally energized by contacts on the following switches

Spindle FWD/REV	SA1 Contacts (7-8)
Coolant Pump	SA3 Contacts [8-10]
Horizontal FWD/REV	SA2 Contacts [10-11]

Since SA1 and SA3 are removed, we need another means to initially energize the KM1 Contactor This could be just a wire looped permanently from Terminal 7 to Terminal 10.

Or as shown here just an extra push button to momentarily

Title	HM52 VFD Spindle Speed Control Circuit	
Size A	Number	Revision
Date: 8/8/2010		Sheet of
File: C:\HM52_CCT_Spindle_VFD.SchDoc		Drawn By: